MOTION CONTROL SYSTEMS

X-PLUS ET B4/S4 SERIES

STEPPING MOTOR DRIVES

INSTRUCTION MANUAL

R.T.A. s.r.l.

Via E. Mattei – Frazione DIVISA
27020 MARCIGNAGO (PV)
Tel. +39.0382.929.855 - Fax +39.0382.929.150
Internet: *http://www.rta.it* - e-mail: *info@rta.it*

R.T.A.
DEUTSCHLAND GmbH

Bublitzer Straße, 34
40599 DÜSSELDORF (Germany)
Tel. +49.211.749.668.60-Fax +49.211.749.668.66
Internet: *http://www.rta-deutschland.de*
e-mail: *info@rta-deutschland.de*

R.T.A. IBERICA
MOTION CONTROL SYSTEMS S.L.

C/Generalitat 22, 1° 3°
08850 GAVA – BARCELONA (Spain)
Tel. +34.936.388.805-Fax +34.936.334.595
Internet: *http://www.rta-iberica.es*
e-mail: *info@rta-iberica.es*

R.T.A. s.r.l. – XPETME05 – 11/20

INDEX

1 - NOTICES, MANUAL STRUCTURE AND TERMINOLOGY 3

2 - HAZARDS AND PRECAUTIONS 4

3 - GENERAL CHARACTERISTICS AND IDENTIFICATION 7

4 - INPUT AND OUTPUT LOGIC SIGNALS 8

5 - POWER INPUTS AND OUTPUTS 11

6 - SETTING AND SIGNALLING 13

7 - DRIVE EXTERNAL CONNECTIONS 15

8 - INSTALLATION AND ENVIRONMENT 17

9 - MAINTENANCE 17

10 - LOGIC INTERFACING EXAMPLES 18

11 - APPLICATION NOTES 20

12 - STO FUNCTIONS (X-PLUS ET S4 only). 24

WARNING: it is user RESPONSIBILITY to check that this manual refers to product model and version that will be used

SYMBOL MEANING	
⚠ **WARNING!**	The section marked with this symbol contains warnings regarding safety problems. If the directions indicated in these sections are not fulfilled, it could arise hazardous situations for human life.
⊘ **CAUTION!**	The section marked with this symbol contains information regarding operations which are strictly forbidden.
🕮 **INFORMATION**	The section marked with this symbol contains important information s to avoid not compliant installations.
[...] **UL**	Some parts of the text between square brackets are the original definition of UL standard rules.

1 - NOTICES, MANUAL STRUCTURE AND TERMINOLOGY

1.1 - This manual covers the following items:

- X-PLUS ET series stepping motor drives in all their standard versions.
- Standard characteristics of special versions of X-PLUS ET series stepping motor drives (see chapter 1.2).
- For models and versions identification see also chapter 3.

1.2 - For the purposes of this manual the terms used assume the meaning below described (see Fig. 1).

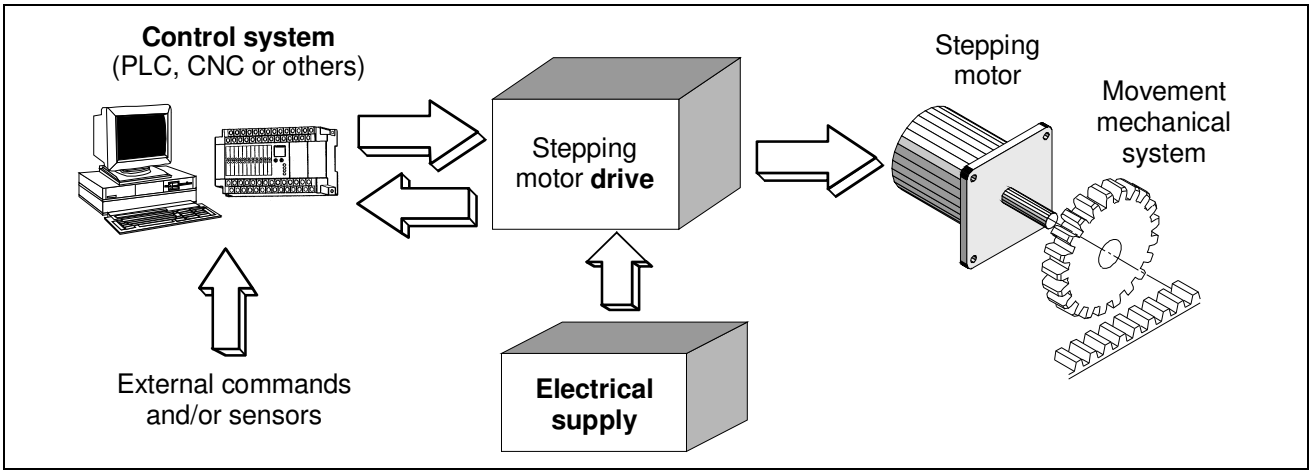

Fig. 1

- Drive: electronic part of an electromechanical motion system, which receives some digital or analog input signals from an external control system and gives to the stepping motor the suitable phase excitation sequences, in order to obtain the mechanical movements required by the control system. The drive can also communicate its status to the control system through some logic signals. In this manual we consider the drive as a BDM (EN 61800-3, chap.3, Fig.1)
- Control system: part of the machine which decides and controls all machine functions and gives to the drive all execution commands. It could be a numerical or programmable control, a personal computer or a specific control card. In the simplest machines it could also be a group of sensors and electromechanical switches.
- Electrical supply: all machine parts suitable to supply the drive in a correct way; anti-interference filter, switches, protection systems and in some cases transformer.
- Standard drives are all models (see chapter 3 for identification) whose characteristics comply completely with those described in this manual. Special versions are all models in which some characteristics differ from the description given in this manual. For these models, some part of the manual does not apply and, in these cases, you must have the specific "variation sheet" which becomes an integral part of the manual itself.

1.3 - Products described in this manual (see identification code in chapter 3) complies with Low Voltage (2014/35/CE) and Electromagnetic Compatibility (2014/30/CE).

Product standards:

1) UL 61800-5-1 1st Edition – Power Conversion Equipment
2) CSA C22.2 No.274 - Industrial control equipment.

1.4 - Remember that, as stated in all regulations, compliance exists only when a product is installed and used in accordance with its destination and following manufacturer prescriptions. Thereby, all relevant indications about use, cautions, installation and limitations here described must be followed by user in order to stay within safety and compliance limits: from this point of view, chapter 2, 8 and 10 are particularly important, but the entire content of this manual has to be carefully read and considered in order to obtain the information necessary for a correct use.

1.5 - Conformity declaration regarding above mentioned products is kept by R.T.A. (as manufacturer residing in EEC country) together with technical construction file at authority disposal.

1.6 - **INFORMATION**.

This manual is conceived in a way to offer to the personnel involved in project and safety verification of a machine all information concerning characteristics, working conditions, application limits hazards and cautions about X-PLUS ET series stepping motor drives. The knowledge of this information is essential for a correct project of machines, apparatus and systems in which the drives are used; it is strongly recommended not to start any operation with the drives before you have completely read and understood the content of this manual; if you find some part of this manual not completely understandable or lacking regarding your particular application, do not hesitate to contact directly R.T.A. that can provide, if necessary, further information in order to make the user able to design his machine and the related safety systems in the best way. Take into account that an incorrect use or installation, a wrong dimensioning of external safety elements related with the drive could bring to economical damages and also to hazards for human life.

1.7 - Consider the fact that these are products with a very wide range of possible applications in many different working and environment conditions. For this reason this manual can only fix limits and general rules but cannot take in consideration every single possible application condition. If you have problems to understand some part of this manual or to meet its indications with your specific application, do not hesitate to contact R.T.A. for further information. Take into account that R.T.A. has twenty years of experience in any kind of applications, which cannot be condensed in a manual but can always be at customer disposal.

1.8 - The terms "user and customer" often used in this manual always indicate a skilled person as defined in chapter 2.7.

1.9 - **INFORMATION**.

This manual is considered valid at the moment of the selling of the product. It cannot be considered inadequate as a consequence of product or manual changes or improvements after the selling. R.T.A. reserves the right of products and manual revisions without notice neither obligation of previous products and manuals revision.

2 - HAZARDS AND PRECAUTIONS

2.1 - **INFORMATION**.

X-PLUS ET series drives are suitable to drive two phases stepping motors with 4, 6 or 8 terminals. (see also section 10 for more details about motor and application limits). The use of stepping motors with 5 terminals is not allowed.
Their use for different purposes is not allowed.

2.2 - **WARNING!**

X-PLUS ET series drives [UL category: Open Type Motor Drive] are power conversion equipments with protection degree IP20 (IEC 60529), foreseen for use in pollution degree 2 environment, with a working temperature range between 5°C (41 °F) and 40°C (104 °F). Thereby, they must be located within a protective enclosure suitable to maintain the above mentioned conditions. The position inside the enclosure must be chosen in a way to avoid that small tools or particles of material can drop inside the drive through the ventilation holes. **Avoid absolutely to install in explosive or flammable environments. Avoid also to install near easily flammable materials and components**; we recommend to verify that all the components located in the enclosure are realized using self-extinguishing materials.

2.3 - **WARNING!**

X-PLUS ET series drives are designed for use in general industrial equipments. Do not use in installations in which an utilization mistake or a malfunction or a failure of the drive could cause:

- Injuries or hazards for human life
- Property damages
- Risks of social and public upsets

In these cases, the person responsible of the installation must design and provide specific equipments or safety techniques, external and independent from the drive, suitable to prevent all dangerous consequences.

Use in conditions not complying with one or more specific limitations or prescriptions stated in this manual regarding electrical, mechanical and environmental specifications or characteristics is strictly forbidden.

2.4 - **CAUTION!**

All products considered in this manual are sub-assemblies without a direct function, foreseen to be integrated in a more complex machine. Only a professional assembler, expert in the field of motor drives and in their related problems, can install and put in service this component**. It is exclusive responsibility of the designer of the complete machine or installation in which this component is used to take care of the safety and reliability of his project.** It is forbidden to use this material in application covered from one or more EEC directives (for instance 2014/30/CE, 2006/42/CE, etc.) before the conformity to those directives has been declared. Regarding 2014/30/CE directive, see chapter 10.

2.5 - **CAUTION!**

Suitable for use on a circuit capable of delivering not more than 5000 A rms symmetrical amperes, 230 Volts maximum; overvoltage category III. Overvoltage category IV is not permitted.

2.6 - **CAUTION!**

Remote overload protection is required. Integral solid state short circuit protection does not provide branch circuit protection. Branch circuit protection must be provided in accordance with National Electrical Code and any additional local code] (see Fig. 7 chapter 7).

[The drive does not provide Motor Overload protection. External or remote Motor Overload protection shall be provided in the end-use applications]. [The drive does not provide motor over-temperature sensing. It shall be provided in the end-use applications].

It is exclusive responsibility of the designer of the complete machine or installation in which this component is used to take care of the safety and reliability of his project.

2.7 - **CAUTION!**

The drive and related motor have a protective earth terminal which must be connected to earth, in order to prevent risk of electric shock.

2.8 - **CAUTION!**

With the drive switched on, do not perform any wiring, maintenance, inspection; in particular, do not perform the setting of the dip-switches. After switching the power off, wait at least 10 minutes before to fulfill these tasks.

Do not touch the inside of the drive and do not get close to connection terminals while the device is powered on.

Do not plug or unplug the connectors while the device is powered on. These operations cause some underhand damages of the contact surface which could bring to a subsequent risk of overheating and fire.

2.9 - **CAUTION!**

Do not try to repair a faulty device. Only R.T.A. personnel is authorized to repair operation.

2.10 - **CAUTION!**

During normal working conditions, the heatsink can reach temperatures until 80°C (176 °F). Do not touch this component for some minutes, after switching off, in order to avoid scald hazard.

2.11 - **CAUTION!**

EtherCAT commands used to switch off the drive output power and internal electronic functional protections use semiconductor devices; they cannot be used to interrupt power in emergency stop function or in any function involving personnel safety.

2.12 - R.T.A. cannot be considered liable for property losses, equipment damages and personnel injuries arising from use or installation not fully compliant with specifications contained.

2.13 - For STO inputs and Monitor output correct use (X-PLUS S only), please refer to Chapter 12.

3 - GENERAL CHARACTERISTICS AND IDENTIFICATION

3.1 - DIMENSIONS

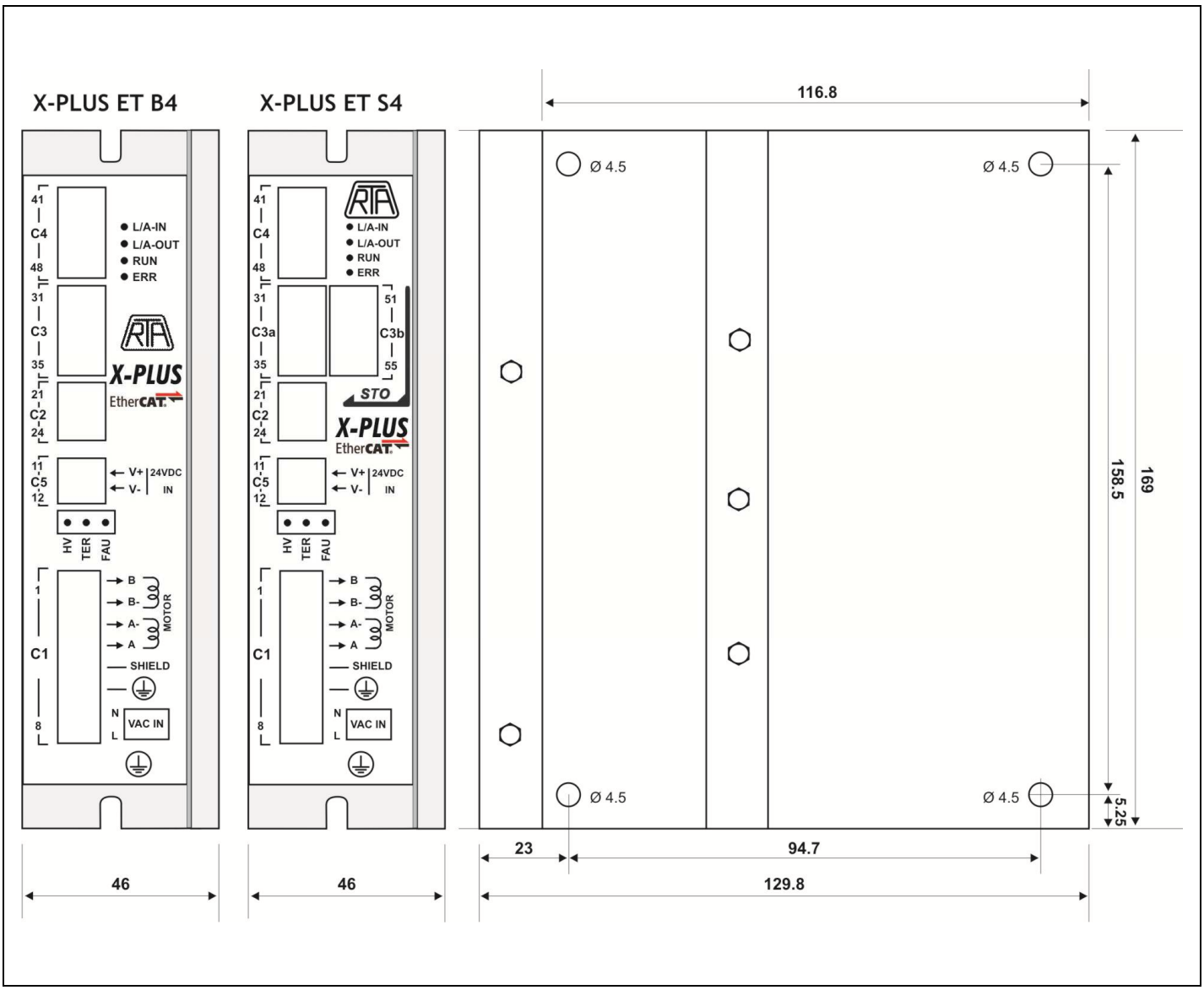

Fig. 2 – Dimensions: all measures in mm.

3.2 - IDENTIFICATION

The models identification of X-PLUS ET series drives is as follows:

X-PLUS ET **X**4.Y

where:

X can be:
- **B**
- **S**, with STO function.

.Y is not present in standard models. If present Y can be a number or an alphanumeric character identifying a special version with some variations with respect to standard models.

Each sample is also identified with a serial number.

4 - INPUT AND OUTPUT LOGIC SIGNALS
(C2, C3a, C3b and C5 connectors, see Fig. 2, 5 and 7)

All input and output logic signals are optically insulated among them and from internal power circuits.

4.1 - INPUTS (C3a)

An input is ON when at its terminals is present a voltage within the following limits:

8 Volt < Vin < 24 Volt

For each input signal correspondent terminals numbers of connector C3a are indicated.

31 (I3): **I3 INPUT.** Auxiliary input.
32 (I2): **I2 INPUT.** Auxiliary input.
33 (I1): **I1 INPUT.** Auxiliary input.
34 (I0): **I0 INPUT.** Auxiliary input.
35: **COMMON OF INPUTS.**

Note: Depending on status of object 0x320C, inputs I0, I1, I2, I3 can be used as special function inputs (see software manual).

4.2 - INPUTS (C5) Logic supply 24 V_{DC}

For each input signal correspondent terminals numbers of connector C5 are indicated:

11: **V+ 24 V_{DC} IN**
12: **V- 24 V_{DC} IN**

4.3 - STO INPUTS (C3b). (For X-PLUS ET S4 only)

51 : **IN+ STO2.** Input IN+ STO2.
52 : **IN- STO2.** Input IN- STO2.
53 : **Shield.** Shield connection for STO inputs cables.
54 : **IN+ STO1.** Input IN+ STO1.
55 : **IN- STO1.** Input IN- STO1.

4.4 - OUTPUTS (C2)

The outputs are considered ON when they are closed as regards to common of outputs (24). For each signal the correspondent terminals numbers of connector C2 are indicated:

21 (O2): **O2 OUTPUT.** Auxiliary output (50 mA max).
If it is set as **Driver FAULT OUTPUT** (see software manual), output is ON when drive is active; output is OFF when drive is blocked by a protection.
For X-PLUS ET S4 only. If it is set as **BRAKE** output (see software manual), output is ON when the drive is in Operation Enabled state. Please use a relay with a flyback diode to drive the brake.

22 (O1): **O1 OUTPUT.** Auxiliary output (50 mA max).
For X-PLUS ET B4 only. If it is set as **BRAKE** output (see software manual), output is ON when the drive is in Operation Enabled state. Please use a relay with a flyback diode to drive the brake.
For X-PLUS ET S4 only. If it is set as **EDM, Error Detection Monitor** (see software manual), output is ON if both STO1 and STO2 inputs are OFF. In this case, the drive is in Safe Torque Off operation mode and the current flowing in each motor winding is inhibited. The output is OFF if one or both STO1 or STO2 inputs are ON.

23 (O0): **O0 OUTPUT.** Auxiliary output (5 mA max).
24: **COMMON OF OUTPUTS.**

Note: Depending on status of object 0x320A, user can set output values (see software manual).

Inputs structure scheme

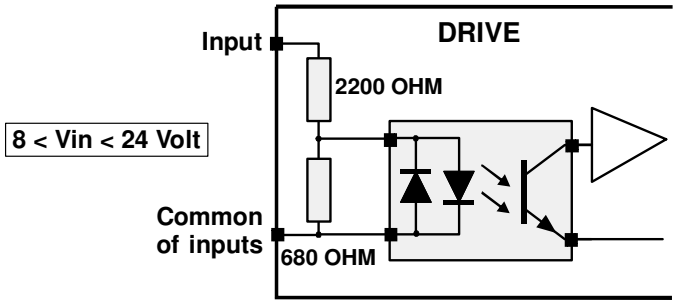

(3a)

Output structure

Vmax = 45 Volt
Imax = 5 mA for O0 output
Imax = 50 mA for other outputs
Vsat ≤ 1 Volt

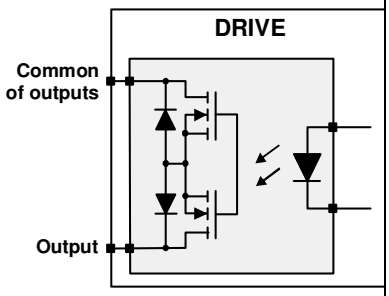

NOTE:
Insert a protection diode in parallel with the load in case of inductive load (ex. relay)

(3b)

STO1 and STO2 inputs structure scheme

Vin = 24 Volt

R1 = 3.3 KOHM
R2 = 390 OHM

18 Volt < Vin_H < 27 Volt
0 Volt < Vin_L < 3 Volt

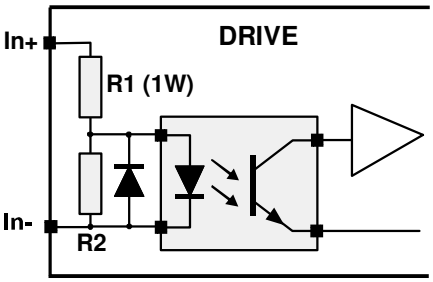

(3c)

MONITOR output structure

Vmax = 45 Volt
Imax = 50 mA
Vsat ≤ 0.8 Volt (at 10 mA)

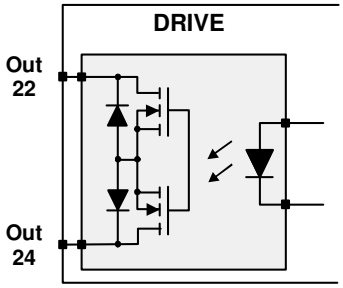

NOTE:
Insert a protection diode in parallel with the load in case of inductive load.

(3d)

Fig. 3 – Inputs and outputs scheme.

4.5 - ENCODER INPUTS AND POWER SUPPLY (C4 Connector, see Fig. 2, 5 and 7)

For each signal the correspondent terminals numbers of connector C4 are indicated:

Pin	Description	RTA cable colors
41	**+5 V_{DC}** (Imax = 150 mA)	RED
42	**IN- I.** IN- INDEX.	WHITE
43	**IN+ I.** IN+ INDEX.	ORANGE
44	**IN- B.** IN- phase B encoder.	PURPLE
45	**IN+ B.** IN+ phase B encoder.	GREEN
46	**IN- A.** IN- phase A encoder.	BROWN
47	**IN+ A.** IN+ phase A encoder.	BLUE
48	**GND**: Negative encoder power supply	BLACK

Note1: Negative encoder power supply (terminal 48) is internally connected to 5 and 6 terminals of C1 and 12 terminal of C5.
Note2: C4 connector must be used to connect encoder of RTA EM / RM series motor

See also software manual for proper motor setting in combination with drive, with reference to setting of object 0x3210. For different motors with encoder please contact RTA.

4.6 - RJ-45 CONNECTORS (EtherCAT communication)

Two standard Ethernet RJ-45 modular connectors (IN, OUT) are provided for the EtherCAT communication. The same pin disposition (same signal) is assigned for both connectors. Figure 4 shows connector RJ-45 used for connection between the drive and the control system.

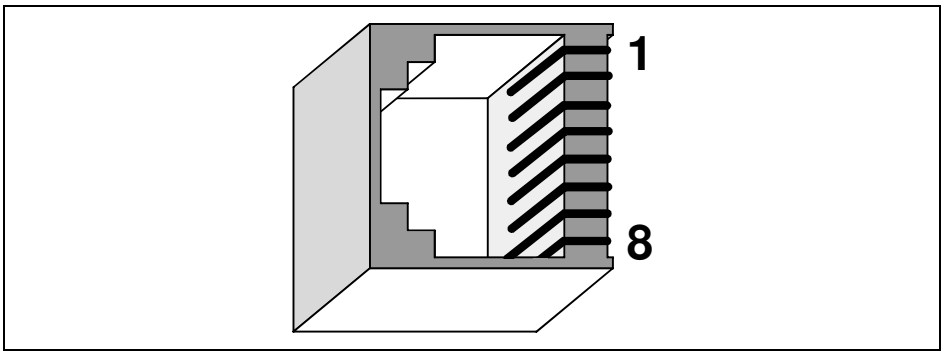

Figure 4 – RJ-45 modular connector

Terminal Number (IN / OUT)	Signal (Ethernet Connection)	Description
1	TX+	Transmitting signals +
2	TX-	Transmitting signals -
3	RX+	Receiving signals +
4	--	75 Ω Connection
5	--	75 Ω Connection
6	RX-	Receiving signals-
7	--	75 Ω Connection
8	--	75 Ω Connection

Table 1

Connect IN to the higher-level device and OUT to the next slave.
Use twisted-pair cables that satisfy at least “Category 5e” to connect the cable.
When you make cables using exclusive tools, use STP (Shielded twisted pair cable) and RJ-45 modular plug with shield.

5 - POWER INPUTS AND OUTPUTS

In this chapter drive power input and output and the necessary power supply for drive working are described.

5.1 - Drive power outputs are the four connections to stepping motor. Drive power inputs can be connected to the main or to an insulation transformer. All connector C1 terminals are listed in the following Table 2.

CONNECTOR C1	DESCRIPTION
1	Motor winding terminal B
2	Motor winding terminal B-
3	Motor winding terminal A-
4	Motor winding terminal A
5	SHIELD
6	GROUND
7	Terminal power supply (HV_{AC}) **N (Neutral).**
8	Terminal power supply (HV_{AC}). **L (Line).**

Table 2

CONNECTOR C5	DENOMINAZIONE
11	Positive terminal logic supply (LV_{DC} 24V)
12	Negative terminal logic supply (LV_{DC} 24V)

Table 3

5.2 - ⃠ **CAUTION!**

Earth terminal screw – Earth terminal screw is in frontal panel inferior part and has to be electrically connected to earth (PE terminal of the machine in which the drive is installed). The terminal 6 of C1 connector has to be connected to earth too.

Earth terminal screw and terminal 6 of C1 connector are the points of motor-drive system that have to be connected to earth (PE terminal). No other point at a different potential power circuit has to be connected to earth. The terminal 5 of C1 connector (SHIELD) is internally connected to terminal 6 of C1 connector. Other points at the same potential of GND could be connected to earth using the cautions suggested by classical techniques to obtain a correct location of multiple earth connections. Shielded cables of motor outputs must be connected to points at the same potential. See connection schemes of Fig. 7, 13 and 14.

5.3 - The drive is **Protection Class I**, it is necessary to take into account earth connections to ensure correct protection levels.

5.4 - Table 4 and Table 5 show power inputs and outputs characteristics:

AC input		X-PLUS ET
HV_{AC} nom	**(V)**	110 - 230
LV_{DC} nom	**(V)**	24
Tolerance V_{AC} nom	**(%)**	15
Max input current	**(A)**	4
Max input power	**(VA)**	440 - 920
Dimensions	**(mm)**	169 × 129 × 46

Table 4

Motor phase outputs		X-PLUS ET
V_{PH} min	**(V)**	0
V_{PH} max	**(V)**	+/- 1.41 x V_{AC}
I_{NP} min	**(A)**	2.4
I_{NP} max	**(A)**	4

Table 5

5.5 - Definition of terms used in Table 4 and in Table 5:

HV_{AC} nom : indicates nominal alternating voltage for drive operation with not stabilized power supply.

LV_{DC} nom: : value of logic continue voltage at which the drive can be supplied.

Max input current : maximum input current allowed for continuous operations.

Max input power : maximum input power allowed for continuous operations.

V_{PH} min : minimum value of the voltage at each motor phase output.

V_{PH} max : maximum value of the voltage at each motor phase output.

I_{NP} : indicates nominal phase current, which flows in each motor winding, measurable with motor turning at **low speed.** The drive is equipped with automatic current reduction with motor at standstill.

6 - SETTING AND SIGNALLING

6.1- **INFORMATION**.

X-PLUS ET series drives are general purpose products which can be used to drive many different motor models in different kind of applications. For this reason they can be set with proper commands (see programmer's manual) suitable to adapt drive characteristics to the specific motor and/or application. **Do not forget to do these settings: wrong setting could get application errors and also motor damages and hazard conditions.** Three led indicate the drive status.

6.2- Fig. 5 shows the position of signalling LEDs, connectors and labels in X-PLUS ET series drives.

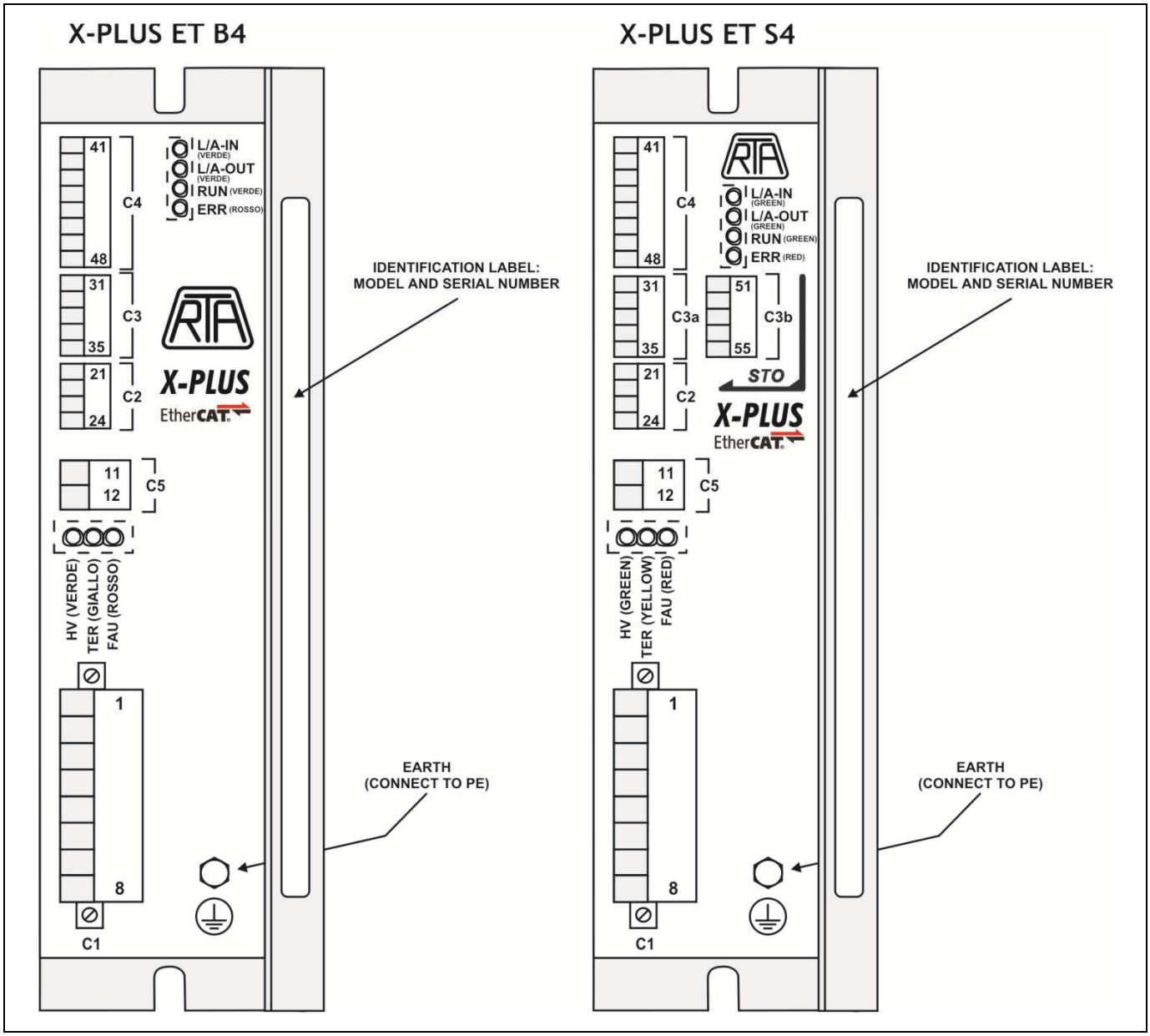

Fig. 5 – Signalling leds and connectors.

6.3- Fig. 6 shows the position of EtherCAT connectors located on the high side of the case.

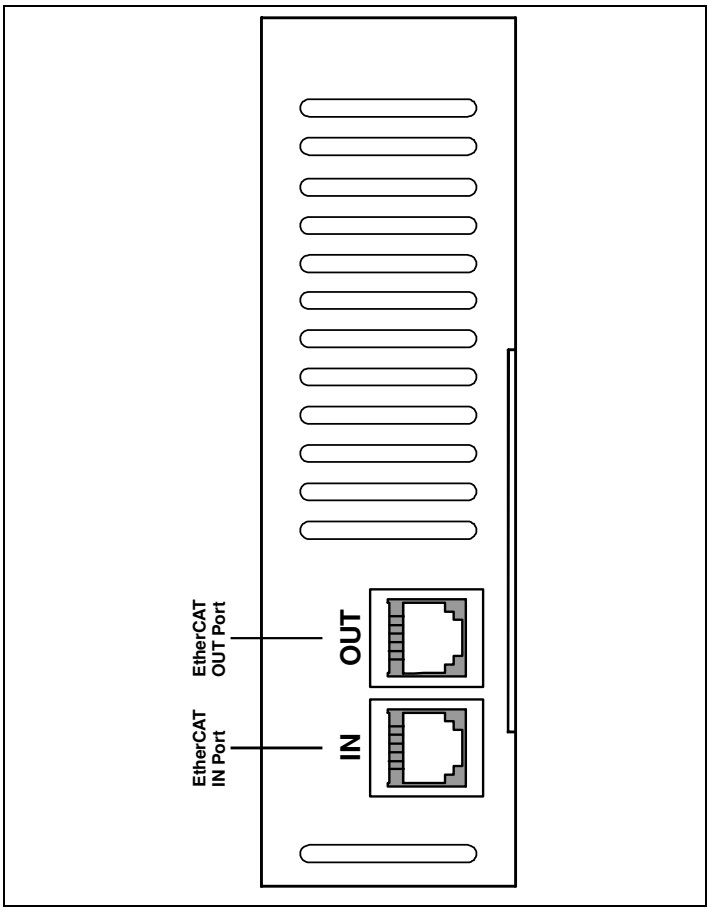

Fig. 6 – EtherCAT connectors (X-PLUS ET series drives high side view).

6.4- **INFORMATION**.

The following list shows the meaning of the alert LEDs provided for the EtherCAT communication:

***LED HV (green)*:** ON = supply voltage is in the correct operating range.

OFF = drive is not supplied or supply voltage is out of the correct range (in the second case also LED FAU is ON).

***LED FAU (red)*:** ON = drive is in no-working state due to one of the following protection:

a- Thermal protection (if LED TER is ON).

b- Max or Min supply voltage (if LED HV is OFF).

c- Short circuit or wrong motor connection (if LED HV is ON and LED TER is OFF).

OFF = drive is in working state if LED HV is ON.

***LED TER (yellow)*:** ON = drive is in no-working state by thermal protection (in this case LED FAU is ON).

OFF = heatsink temperature is lower than the limiting value.

When one of the above-written protections occur, the drive goes in Fault state, in accordance with standard EtherCAT (see software manual).

6.3- The following list shows the meaning of the alert LEDs provided for the EtherCAT communication:

PORT0 Link/Activity indicator: L/A – IN (green)
PORT1 Link/Activity indicator: L/A – OUT (green)
RUN indicator: RUN (green)
ERR indicator: ERR (red)

7 - DRIVE EXTERNAL CONNECTIONS

7.1- CAUTION!

Dimensioning power for filter, switching and protection system and possible transformer. The basis to calculate this power is the total power required from drive and motor. It is the sum of the following terms:

- Mechanical power delivered to load: mainly depending on application characteristics like friction, inertia, efficiency of mechanical transmission etc.
- Motor losses: mainly depending on motor type, drive voltage, speed and duty cycle.
- Drive losses: mainly depending on drive model, current setting and duty cycle; according with these parameters these losses can approximately vary between 60 and 130 Watt. It is often very hard to do an exact forecast of drive and motor losses; in these cases a safety over-dimensioning of the supply elements proportional to the uncertainty of the data is recommended. To get more accurate information, contact R.T.A. describing all the data of the particular application.

7.2- WARNING!

Protection systems indicated in Fig. 7 must include:

- **SPD (Surge Protection Device) nominal working voltagedi 240 V_{AC}, overvoltage category III, 1500 V_P, 20 kA (Modello VAL-US-240/40/1+0 Phoenix Contact GmbH or equivalent) [Primary Circuit Overvoltage Protection].**
- **Residual current protective device with operating residual current of 30 mA.**
- **Branch circuit protection fuses: UL Type JDDZ, class CC, 600 VAC, 8 Amp (Cooper Bussman model KTK-R-8 or equivalent) [Branch circuit protection fuses].**

7.3- WARNING!

For external connections copper wire must be used [Use Copper Conductors only] and certified to work at 60/75 °C [Use 60/75 °C wires only].

The cross-sectional area of conductors used in power supply circuit must be chosen according with dimensioning power (see 7.1). The cross-sectional area of the four shielded conductors between motor and drive must be chosen in accordance with nominal current which has been set in the drive.

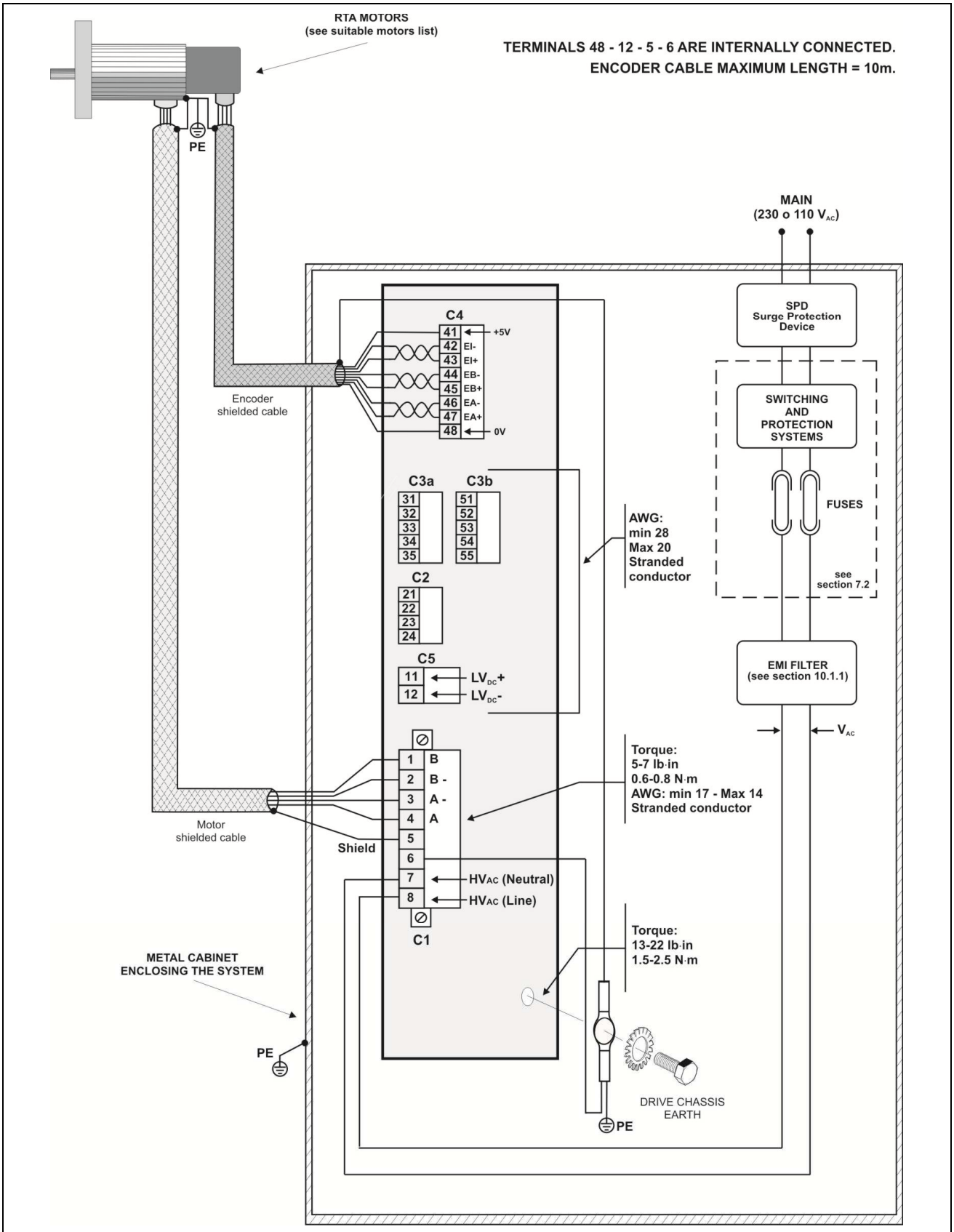

Note: C3b connector is not available in X-PLUS ET B4.

Fig. 7 – Drive external connections scheme.

Note: For connection drive-encoder use twisted-pair shielded cable (EI- and EI+; EB- and EB+; EA- and EA+).

8 - INSTALLATION AND ENVIRONMENT

All products considered in this manual have the following common characteristics:

8.1 - Protection degree IP20: it is user responsibility to provide an adequate protection enclosure suitable to meet the standards regarding the specific application in which the products are used.

8.2 - **CAUTION!**

Installation and work environment. Installation is allowed in a micro-environment with:

- **Environment conditions class 3K3** (IEC 721-3-3): that implies, among other things, a working temperature from +5°C to +40°C and relative humidity from 5% to 85% non condensing.
- **Pollution degree 2**: that implies, among other things, that installation in environments in which explosive and/or flammable and/or chemically aggressive and/or electrically conductive gas, vapor or dust could be present is strictly forbidden.
- **Mechanical conditions class 3M1** (IEC 721-3-3).
- **Maximum operating altitude:** 2000 meters.

If the environment in which the machine is used does not satisfy these conditions, suitable conditioning systems have to be provided for the enclosure.

8.3 - Storage environment in original enclosure:

- Temperature: from -25°C to +55°C. Relative humidity: from 5% to 95%.
- Environment conditions class 1K3 (IEC 721-3-1). Pollution degree 2.

8.4 - The drives generate some amount of heat (see chap. 7.1). Take care of this in considering the total amount of heat generated in the enclosure in which the drives are located. In order to make easier air circulation in the drive, install the drive vertically (not turned upside down) with at least 5 cm of free space over and under the drive and 1 cm to the left and the right of the drive. Do not obstruct air gratings.

9 - MAINTENANCE

9.1- **INFORMATION**.

ROUTINE MAINTENANCE.

It needs to check periodically status and installation of the drive:

- Tightening and correct insertion of input and output power connectors.
- Correct insertion of logic signals connector.
- Tightening of earth connections.
- Cleaning air gratings both on the chassis and on the heatsink of the drive.

9.2- **FAILURE MAINTENANCE.**

In case of failure, the faulty drive must be returned to R.T.A.

Do not try to repair a faulty device. Only R.T.A. personnel is authorized to repair operation.

10 - LOGIC INTERFACING EXAMPLES

In this chapter some interfacing techniques are shown. They have to be considered only as examples. The best way to interface the drive with the control system can be chosen only with a complete knowledge of control system and application needs.

Note: The following interfacing examples MUST NOT be used with STO1, STO2 inputs and MONITOR output.

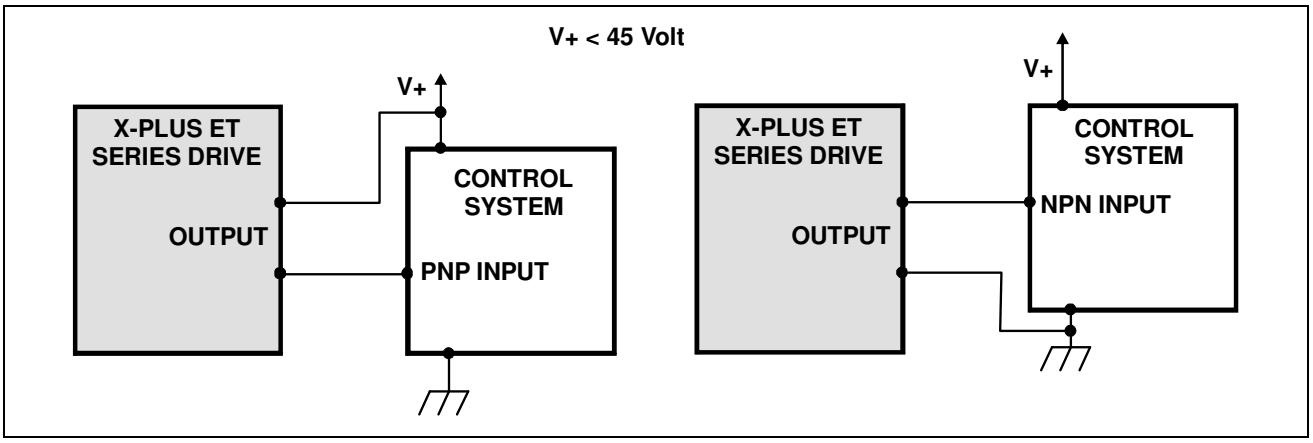

Fig. 8 – Interfacing a X-PLUS ET logic output and an input of a control system operating at V+ voltage.

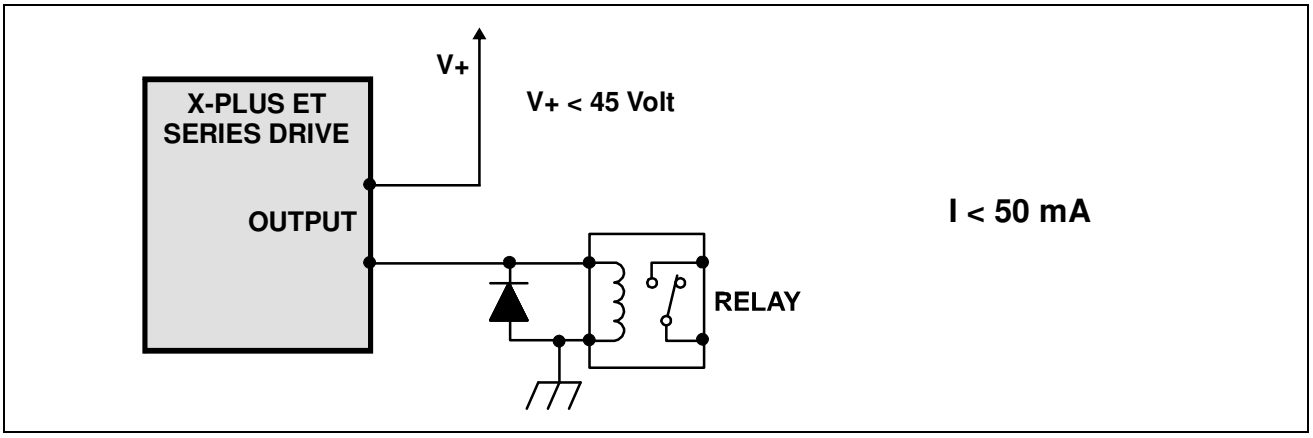

Fig. 9 – Driving a micro-relay by means of a X-PLUS ET logic output.

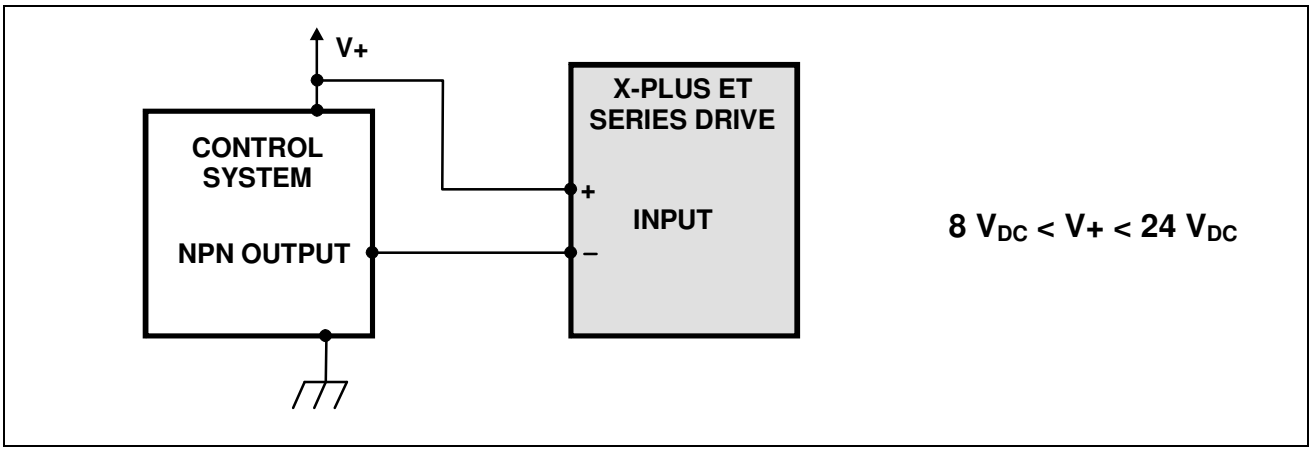

Fig. 10 – Driving a X-PLUS ET logic input from a control system with a NPN open collector output.

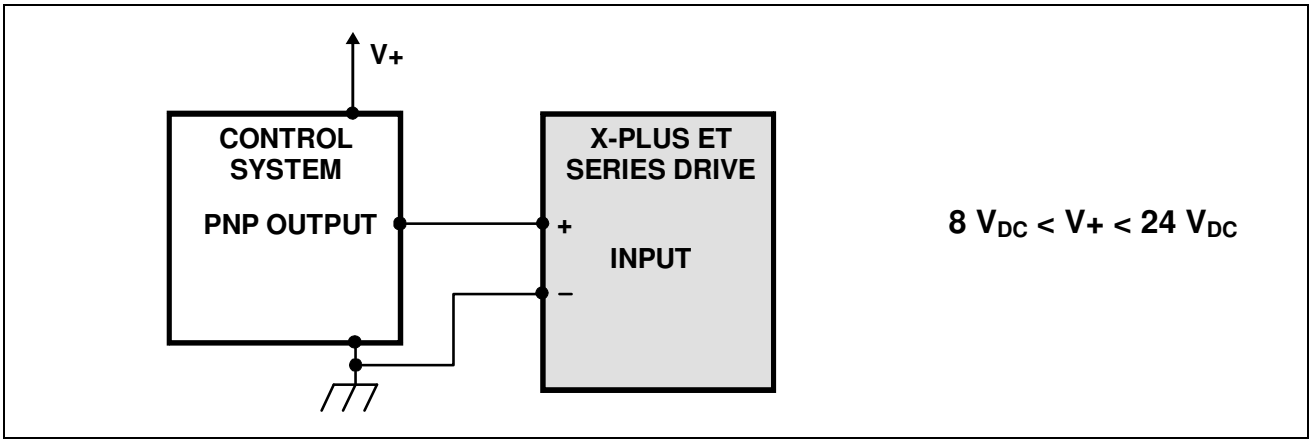

Fig. 11 – Driving a X-PLUS ET logic input from a control system with a PNP output.

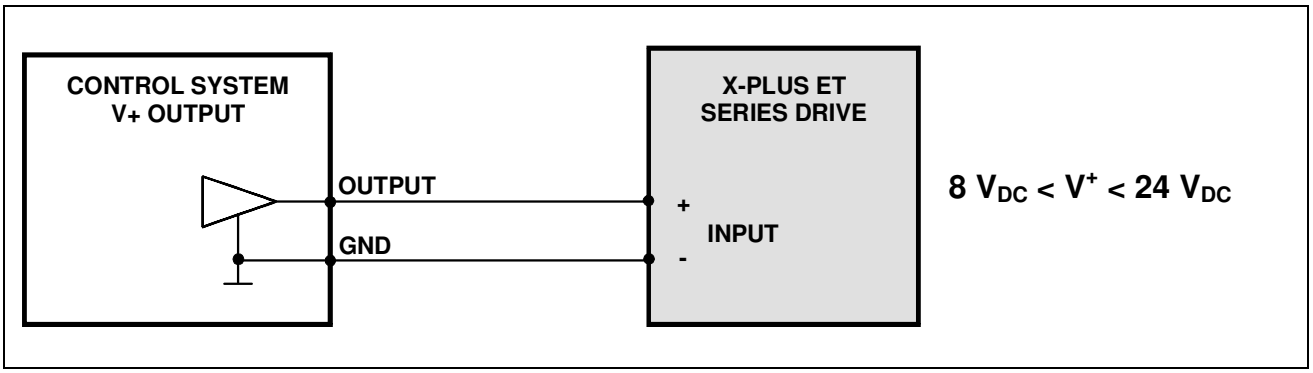

Fig. 12 - Connection example with control system with TOTEM-POLE (PUSH-PULL) output.

11 - APPLICATION NOTES

11.1- INFORMATION.

Electromagnetic compatibility (directive 2014/30/CE). X-PLUS ET series drives are BDM (Basic Drive Module), as defined in the EN 61800-3. Only a professional assembler, expert in the field of motor drives and in their EMC aspects, can install and put in service this component. R.T.A. has the responsibility to verify the products compatibility in some typical way of use in order to give correct installation information. In any cases, it is responsibility of the professional assembler, who installs this product, to verify the compatibility of the complete machine or system.

11.1.1- The set consisting of drive, motor, transformer and all related cablings are source of electromagnetic interferences. The assembler of installation must consider these problems during the project of the plant where the drive (or drives) will be installed in order to shield and/or reduce these interferences. Tests performed by R.T.A. show that the most effective measures able to reduce these interferences are the following:

- Shielding of cables for the connection between motor and drive. The shield of this cable has to be directly connected to X-PLUS ET series drive terminal 5. The shield of encoder cable, if it is available, has to be directly connected to the earth screw of the drive. This shielding can be avoided only in case of very small and compact machine where motor, drive and related connections are located in the same enclosure, showing adequate shield performance.
- It is suggested not to exceed the maximum length of 10 meters for the wiring between motor and drive. In case of application requires the exceeding of this limit, please contact RTA.
- Connect earth line to motor chassis. To reduce the radio-frequency emissions, the mechanical connection of motor to machine chassis (by means of mounting flanges and screws), is typically simple and effective solution. In this case, both screws and chassis must be of conductor material and the chassis must be connected to earth. See Fig. 14.
- Location of drive in a cabinet shielded from electromagnetic interferences.
- Interpose an EMI filter in AC power input line (see Fig. 7) in order to reduce conducted electromagnetic interferences. Filter characteristics in a specific installation depend on following factors:
  - Strictness degree of the specific standard regarding the machine on which drive is used.
  - Power level of application (voltage and current setting of the drive).
  - Presence of other filtering systems in the general electrical machine installation.

  In any case, following filter type is recommended:
  - CORCOM SK series.

  Different models inside these series differ for current rating; thereby choose the specific model according to power level of your installation.
- Consider that the position of the filter in the system is extremely important: no electromagnetic coupling must take place between electromagnetic source and circuits (and lines). To this end, filter and main must be kept as close as possible.
- All earth connections mentioned above have to be realized with the less possible inductance.

11.1.2- To improve the drive logic input/output signals immunity from external noise the following well known procedures, to manage the relatively fast signals treatment must be considered:

- Use shielded cables.
- Keep signal cables separate from power cables. In particular keep signal cables separate from motor output cables.
- Carefully verify logic level compatibility when interfacing drive with control system.

11.1.3- Following these procedures is essential to realize an installation which complies with the requirements of 2014/30/CE directive. The real specific standard compliance have to be proved in the complete installation. In fact the effectiveness of the suggested application notes depends also on machine topology and on the measurement setup. Test performed by R.T.A. simulating typical installations and following the mentioned above indications show that EN61800-3 standard compliance applications can be achieved.

11.1.4- In some cases, due to the characteristics of particular installations, conflicts between ground connections necessary for shielding purposes and ground connections necessary for safety reasons could arise. Remember that, in such cases, prescriptions regarding safety take priority, but remember also that, in almost all of the cases it is possible to find a solution meeting both prescriptions; R.T.A. is available for further information about these problems.

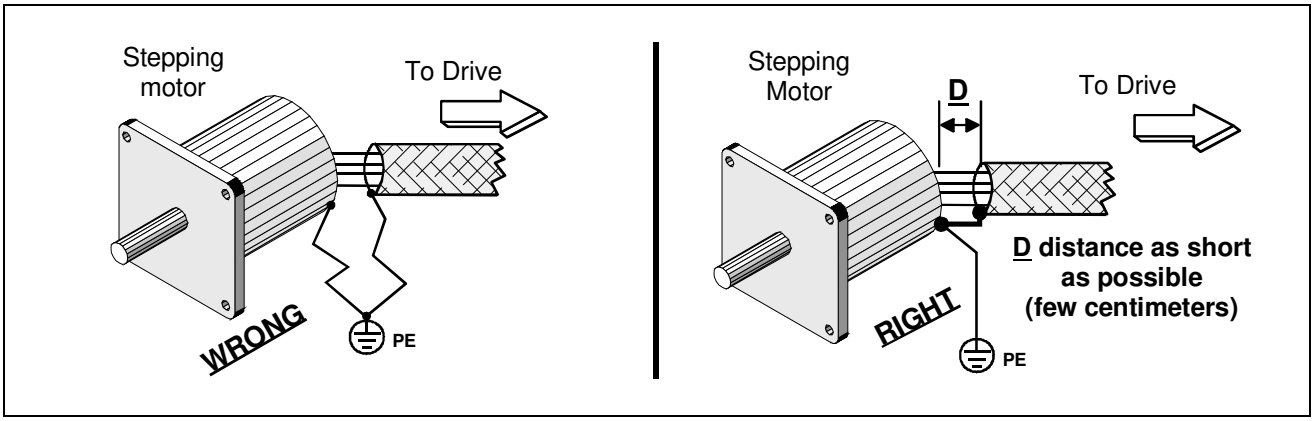

Fig. 13 - Shielded connection at stepping motor side.

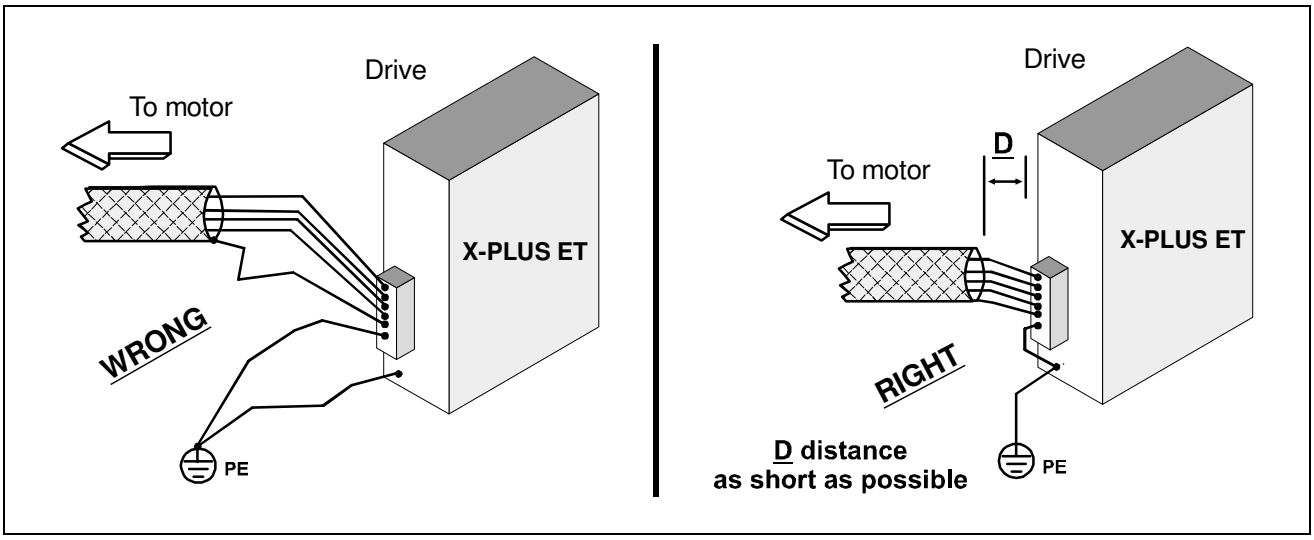

Fig. 14 - **Shielded connection at drive side.**

11.2- MOTOR LIMITATIONS.

X-PLUS ET drives can be used with many different motor types; nevertheless there are some limitations about the characteristics of the motor as specified in the following tables.

The Table 6 and Table 7 indicate the suggested limits for nominal motor current and nominal phase inductance. You can exceed these limits provided that you can accept some performance reduction in your application like, for example, lower duty cycle and/or less exploitation of motor characteristics and/or greater acoustical noise. Anyhow we recommend to contact R.T.A. in case you need to exceed such limits.

DRIVE TYPE	PHASE INDUCTANCE SUGGESTED LIMITS (mH)			
	110 V_{AC}		230 V_{AC}	
	Min	Max	Min	Max
X-PLUS ET	1.2	20.0	2.0	20.0
Table 6				

DRIVE TYPE	MOTOR NOMINAL CURRENT SUGGESTED LIMITS (A)	
	Minimum	Maximum
X-PLUS ET	1.70	4.0
Table 7		

The motor must have insulation characteristics foreseen to withstand a direct connection to the main supply (110 or 230 V_{AC}) as defined in the standard compliance EN 60034-1.
Furthermore, in order to build up a reliable application, the general rules explained in the following sections 11.3, 11.4, 11.5 has to be taken into account.

11.3 - REVERSE ENERGY MANAGEMENT.

During deceleration of load with high inertia, some amount of energy can flow from motor to drive. In case of excessive reverse energy, an overvoltage protection could inhibit the drive operation making impossible the application. During the test of a new application in which there are decelerations starting from relatively high speed, with high inertial load, always check carefully the operation conditions during the decelerations.

11.4- EQUALIZATION.

Equalization changes the phase current profile in the medium speed range. If equalization is excluded, current profile reference approximates sinusoidal shape independently of speed. If equalization is active, current profile reference is switched to a square shape when speed exceeds a certain threshold: as a consequence, with equalization active, the torque output of the motor will be increased in the medium speed range.

Generally speaking, it is helpful to keep equalization active in application with long movement at medium speed and relatively low acceleration.

On the contrary, in application with short movement and relatively high acceleration it is better to exclude equalization, because the continuous changing of the current profile could cause some motor instability; this is particularly important when these movements occur at high repetition rate.

Consider also the fact that, with equalization active, motor heating during the movements is greater. For this reason, it is suggested to exclude equalization in the following two cases:

- Drive current is set to a value greater than nominal motor current
- Application working conditions are near to the thermal limits of the motor (see sec. 11.5).

11.5- MOTOR LOSSES AND HEATING

During the design and testing of a new application, from the point of view of the motor heating, it is necessary to be very careful in the choice of following parameters:

- Drive voltage
- Motor inductance
- Operating speed
- Duty cycle
- Current setting of the drive

The combination of these parameters settles motor losses and, if wrong, could bring to the overheating and, as a consequence, to a loss of reliability or damage of the motor.
Following general rules should be taken in consideration:

- Motor heating strongly increases with the **Voltage/Inductance** ratio and is proportional to duty cycle and to current setting
- Motor heating is much lower at stand still than during the movements
- As far as regards operating speed, there is always a certain speed at which the heating is maximum; below and above this speed, the heating decreases. The value of this speed can be established only when all other parameters (motor type, voltage, current setting) are known. As a very coarse indication, for the more common combinations of drive and motor type, it could be in the range of 500 – 1500 RPM.

When all operating conditions of a new application are defined, it is strongly recommended to measure motor body temperature: this measurement should be made in the real final working conditions of the machine (motor mounted in its mounting flange and working with the effective machine cycle). Checking the temperature value, after a steady state condition is reached, you can have a very important indication about the long term reliability of your application.

12 - STO FUNCTIONS (X-PLUS ET S4 only).

12.1- SYSTEM CONFIGURATION DESCRIPTION

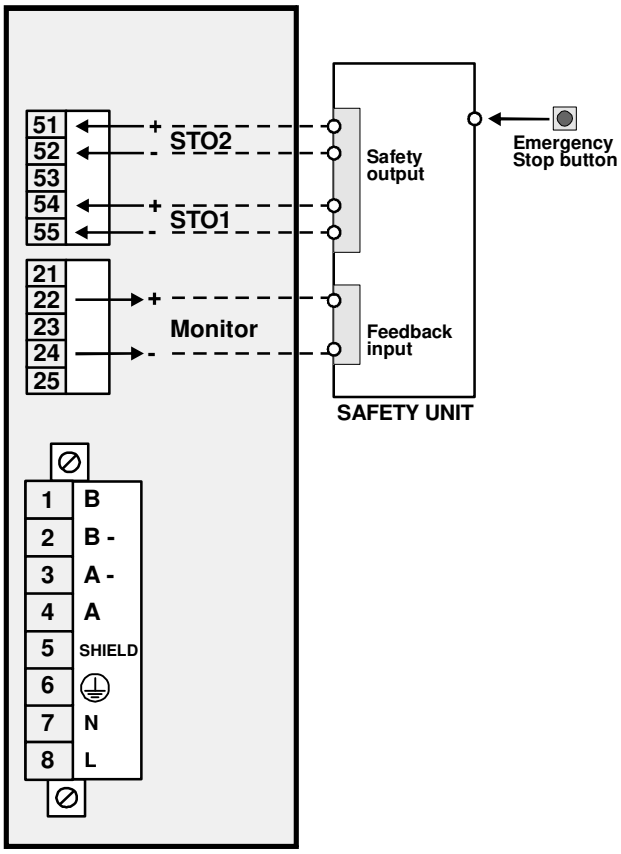

Fig. 15 – Connection scheme.

12.2- STO FUNCTION

Safe-torque-off function reduces injury risks and ensures the safety for those who work near moving parts of equipment. This function employs 2-channel input signal that independently block the motor current.

12.3- STO FUNCTION SCHEME DESCRIPTION

STO function disables the current flowing into motor windings.
Each of two STO1 and STO2 channels act independently to shut down motor current. A failure of one single channel does not compromise the activation of the safety function.

12.4- STANDARD CONFORMITY

STO function meets the following safety standards:

- IEC 61800-5-2, safe torque off (STO)
- IEC 61508, SIL3

Probability of a dangerous failure per hour, with use of Error Detection Monitor (EDM) to grant Diagnostic Coverage (DC), is described in the following table:

PHFd	Test Timing	Mission Timing	SIL
3.50×10^{-10}	1 month	10 years	3
4.00×10^{-10}	10 years	10 years	3

12.5- ⚠ **WARNING!**

RISK ASSESSMENT

The drive meets the requirements safety standards above described.
However, before activating safety function, make sure to assess the risks associated with the overall equipment to ensure complete safety.

12.6- ⚠ **WARNING!**

RESIDUAL RISK

Even if STO function is active, the following risks remain. Please ensure the installation safety is maintained, even in case the below-indicated situations occur, through a correct risk assessment.

1. When STO function is activated while the motor is running, the current into the motor is shut down. The motor continues to run due to inertia. Please make sure to ensure safety conditions of the system to avoid any danger until the motor stops completely.
2. When the motor is used in vertical axes, it is possible that without holding torque, the axes rotate due to gravity. In this case, it is necessary to provide external device (i.e. electromagnetic brake) to stop the motor within requested range.
3. In case of short circuit or failure of power device transistor, the motor could make an uncontrolled movement within a range up to 180 degrees in electrical angle (180 degrees in electrical angle=1/50 of a turn) and then remain a stable position. It is necessary to verify that this limited movement does not correspond to some risky conditions.
4. Be sure that SAFE TORQUE OFF function properly works before machine use, at first machine start-up and at every drive replacement. If input / output signals are not used correctly, the STO function doesn't work properly and dangerous situation can occur.
5. When STO function is active, the drive power supply is not shut down. In case of maintenance or check of the drive, please be sure to shut down power supply to avoid electric shock.

12.7- **CONNECTIONS**

All input and output logic signals are optically insulated among them and from internal power circuits.
For each input signal correspondent terminals numbers of connector C3b are indicated:

51 : **IN+ STO2.** Input IN+ STO2.
52 : **IN- STO2.** Input IN- STO2.
53 : **Shield.** Shield connection for STO inputs cables.
54 : **IN+ STO1.** Input IN+ STO1.
55 : **IN- STO1.** Input IN- STO1.

The outputs are considered ON when they are closed as regards to common of outputs (24). For each signal the correspondent terminals numbers of connector C2 are indicated:

21 (O2): **O2 OUTPUT.** Auxiliary output.
If it is set as **Driver FAULT OUTPUT** (see software manual), output is ON when drive is active; output is OFF when drive is blocked by a protection.
22 (O1): **O1 OUTPUT.** Auxiliary output.
If it is set as **EDM, Error Detection Monitor** (see software manual), output is ON if both STO1 and STO2 inputs are OFF. In this case, the drive is in Safe Torque Off operation mode and the current flowing in each motor winding is inhibited. The output is OFF if one or both STO1 or STO2 inputs are ON.
23 (O0): **O0 OUTPUT.** Auxiliary output.
24: **COMMON OF OUTPUTS.**

Note: Depending on status of object 0x320A, user can set output values (see software manual).

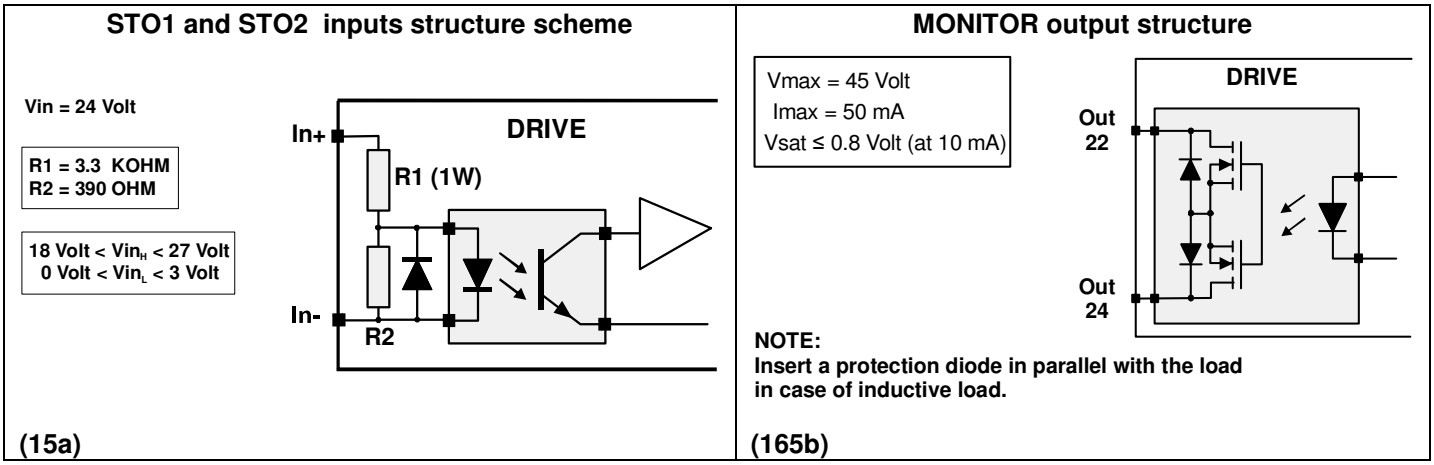

Fig. 16 – Inputs and outputs scheme.

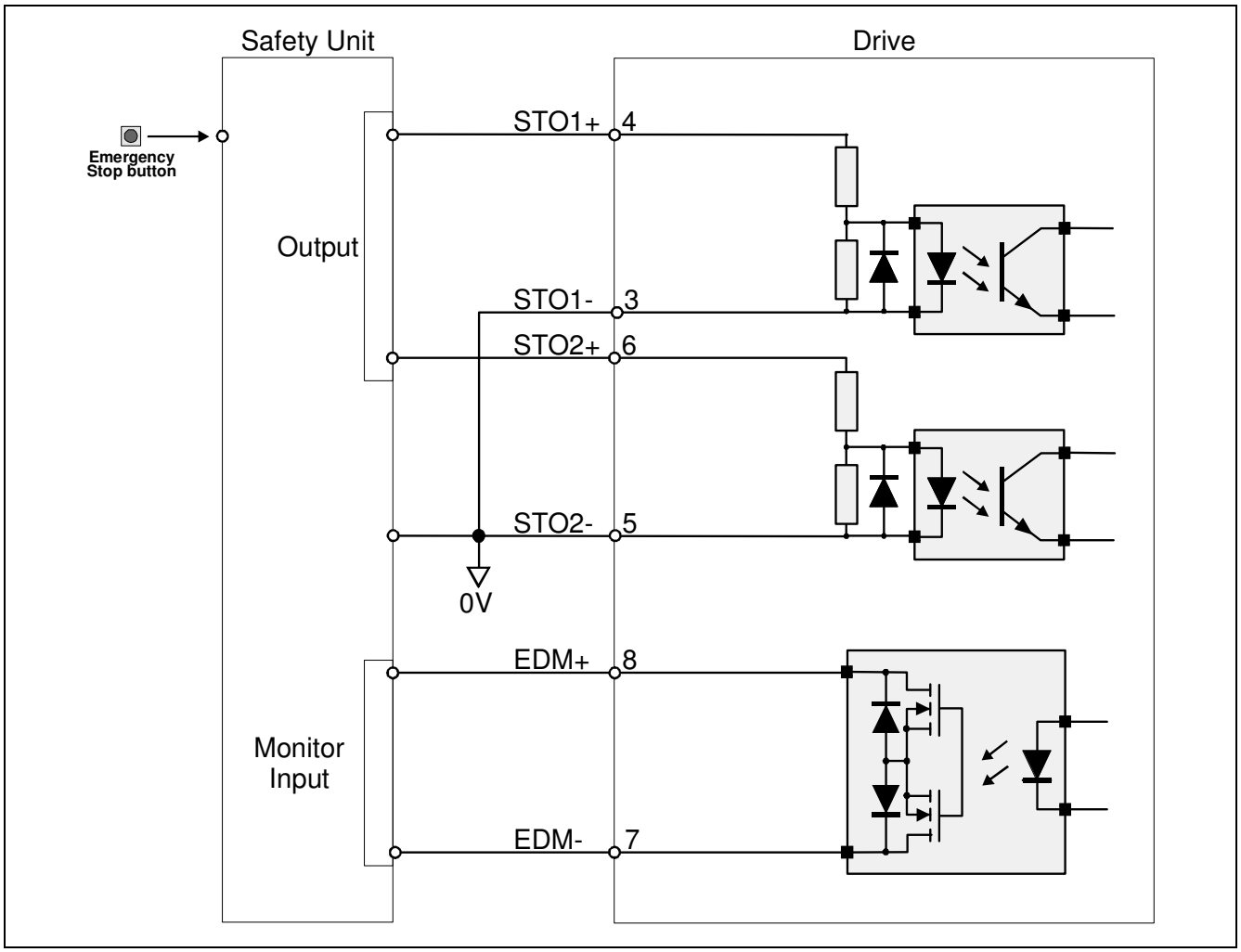

Fig. 17 – Wiring to SAFETY UNIT example.

12.8- **ENABLE / DISABLE STO: TIMING INDICATIONS**

The correct and stable enabling of STO function is effective after a maximum time of 20 ms after STO1 and STO2 switching off.

Monitor Output indicates that STO function is active with a maximum delay of 20 ms from STO1 and STO2 input signals switch off (Figure 18).

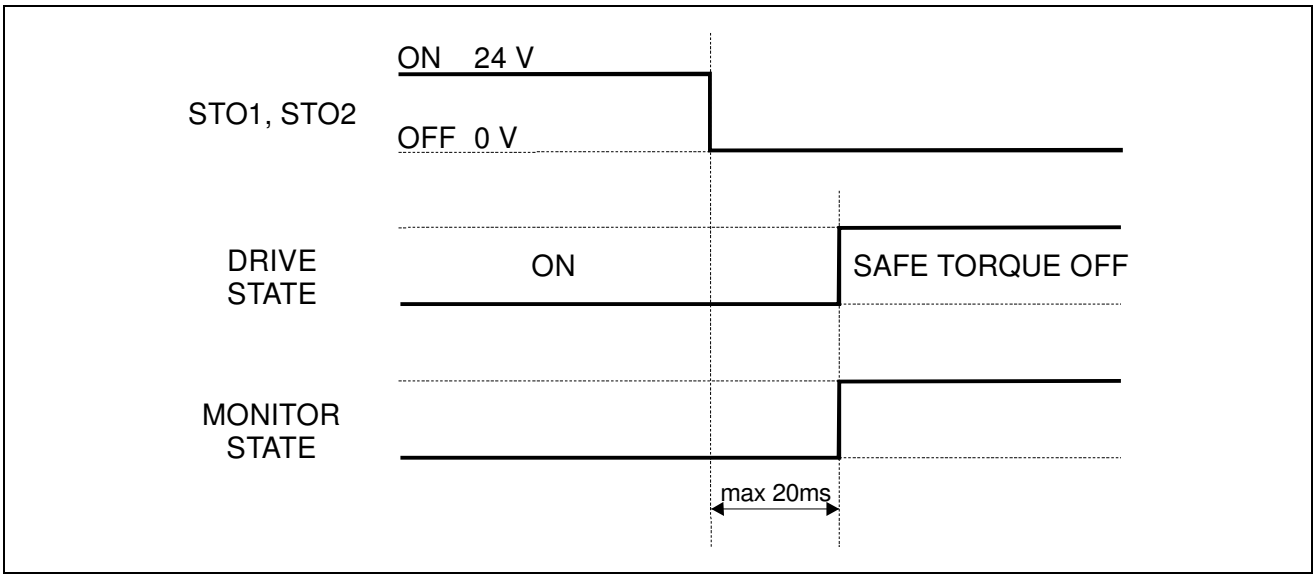

Fig. 18 – STO Timing.

12.9- **TIMING OF INPUT-OFF SHOT PULSE FOR SAFETY DEVICE SELF-DIAGNOSIS**

In case of the safety device perform self-diagnosis through input-off shot pulses, the input-off shot pulse must have a maximum duration of 1 ms.

STO function is not activated when the period of STO inputs signal STO1 / STO2 - OFF is 1 ms or less.

In order to surely grant the activation of the Safe Torque Off function, it is necessary that STO1 and STO2 input signals are turned off for 20 ms or more (Figure 19).

Note: When STO1 and STO2 input signals switch ON and OFF in a range of 1-20 ms, motor loss of synchronism and/or wrong signaling can occour.

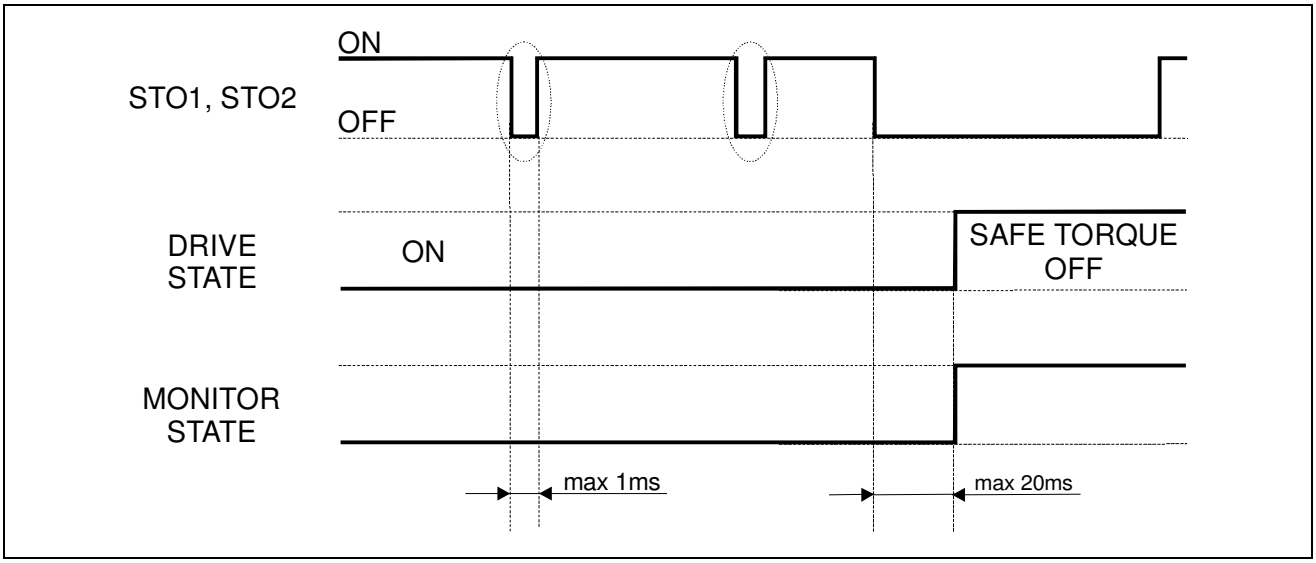

Fig. 19 –STO Self-Diagnosis Timing.

12.10- **EDM (ERROR DETECTION MONITOR)**

Error Detection Monitor output is a signal to monitor problems in safe-torque-off circuit or between SAFETY UNIT and STO1 and STO2 inputs. The following Table 10 shows correspondences between STO1 and STO2 inputs and Monitor Output states.

STO1	STO2	MONITOR OUT
ON	ON	OFF
ON	OFF	OFF
OFF	ON	OFF
OFF	OFF	ON

Table 10

12.11- **EDM – CONNECTION EXAMPLE**

In Figure 17 is described a connection example that allows to enable Safe Torque Off function by means of emergency stop button through SAFETY UNIT (Figure 17).
Under normal conditions, pressing emergency stop button, STO1 and STO2 become OFF and EDM becomes ON (with maximum delay of 10 ms). When emergency stop button is released, if feedback circuit of SAFETY UNIT is reset and two safety inputs are set ON, EDM becomes OFF. This allows to restart the machine working.

12.12- **ERROR DETECTION METHOD**

Errors between input logic states and monitor output must be detected by means of SAFETY UNIT.
For correct connections, please refer to the SAFETY UNIT manual.
EDM (Error Detection Monitor) is not a safety output. Do not use EDM for any purpose other than failure monitoring.

12.13- ⚠ **WARNING!**

VERIFICATION TEST

Please verify that SAFE TORQUE OFF function properly works at every first machine start-up and at every drive replacement.
Before check the correct working of SAFE TORQUE OFF function, please verify that every drive connections properly operate.
Verification Test needs the following procedures:

1. Switch on the drive power supply.
2. Set ON both STO1 and STO2 inputs.
3. Verify that motor is in CURRENT ON state.
4. Verify corresponding EDM output state.
5. Set OFF both STO1 and STO2 inputs.
6. Verify that motor runs without holding torque and it is in CURRENT OFF state.
7. Verify corresponding EDM output state.
8. Repeat the points from 5 to 7 setting OFF STO1 and STO2 inputs separately.

12.14- ⚠ **WARNING!**

SAFETY CAUTIONS

Please thoroughly observe the following safety cautions to use safe-torque-off function.
Not correct use of safe-torque-off function can result to personal injury or death.

1. Safety system with safe-torque-off function must be designed by person with expertise of related safety standards and through understanding the descriptions specified in this manual.
2. The security system development that involves the use of STO function must be the result of an appropriate risk assessment.
3. When safe-torque-off function is active during the motor run, current motor is turned to zero and the motor continues to run due to inertia. Please design safety system so that no risks occur until the system stopped.
4. When the motor is used in vertical axes, the motor can rotate due to gravity. Please provide external device (i.e. brake) to stop the motor within requested range.

5. In case of short circuit or failure of power device transistor, the motor could make an uncontrolled movement within a range up to 180 degrees in electrical angle (180 degrees in electrical angle=1/50 of a turn) and then remain a stable position. It is necessary to verify that this limited movement does not correspond to some risky conditions.
6. Be sure that SAFE TORQUE OFF function properly works at first machine start-up and at every drive replacement. If input / output signals are not used correctly (for example due to miswiring), the STO function doesn't work properly and dangerous situation can occur.